HGSC256643 1/64DUTY

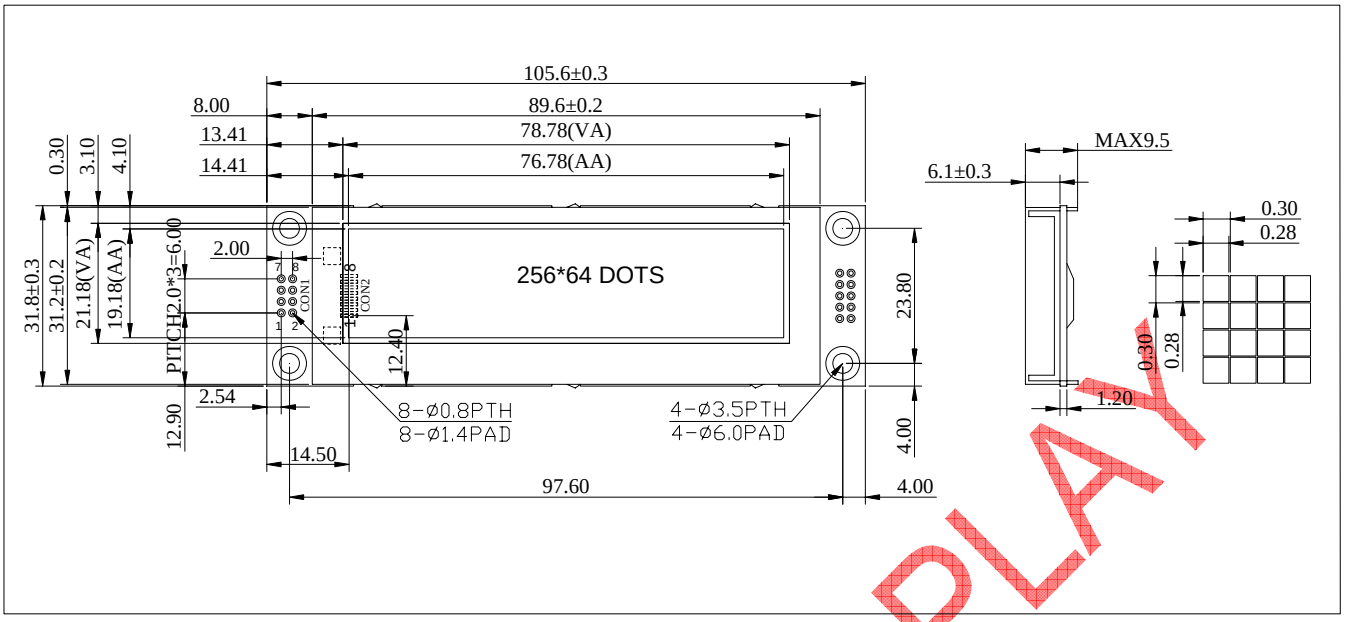

PIN CONNECTIONS(CON1)

Pin	Symbol		
	SPI	UART	RS232
1	V_{SS}	V_{SS}	V_{SS}
2	V_{DD}	V_{DD}	V_{DD}
3	NC	NC	TX
4	SDI	RX	RX
5	SCLK	NC	NC
6	BUSY	BUSY	NC
7	/REST	/REST	NC
8	/CS	NC	NC

NOTES:

1. +5V/+3.3V power supply optional
2. SPI、UART、RS232 interface optional
3. Display color：YELLOW/GREEN/WHITE optional

MECHANICAL DATA

Item	Nominal Dimensions	Unit
Module Size（W x H x T）	105.6×31.8×9.5	mm
Viewing Area (W x H)	78.78×21.18	mm
Dot Pitch (W x H)	0.30×0.30	mm
Dot Size (W x H)	0.28×0.28	mm

ABSOLUTE MAXIMUM RATINGS

Item	Symbol	Min.	Max.	Unit
Supply Voltage (Logic)	V_{DD}-V_{SS}	-0.3	5.5	V
Input Voltage	V_I	V_{SS}	V_{DD}	V
Operating Temp.	T_{OPR}	-30	80	℃
Storage Temp.	T_{STG}	-40	80	℃

ELECTRICAL CHARACTERISTICS (V_{DD}=3.3V, Ta=25℃)

Item	Symbol	Min.	Typ.	Max.	Unit
Input High Voltage	V_{IH}	0.8 V_{DD}	-	-	V
Input Low Voltage	V_{IL}	-	-	0.2V_{DD}	V
Output High Voltage	V_{OH}	0.9 V_{DD}	-	-	V
Output Low Voltage	V_{OL}	-	-	0.1V_{DD}	V
Supply Current	I_{DD}	-	180	-	mA
		50% display area on, V_{DD} =3.3V			

TSINGTEK DISPLAY